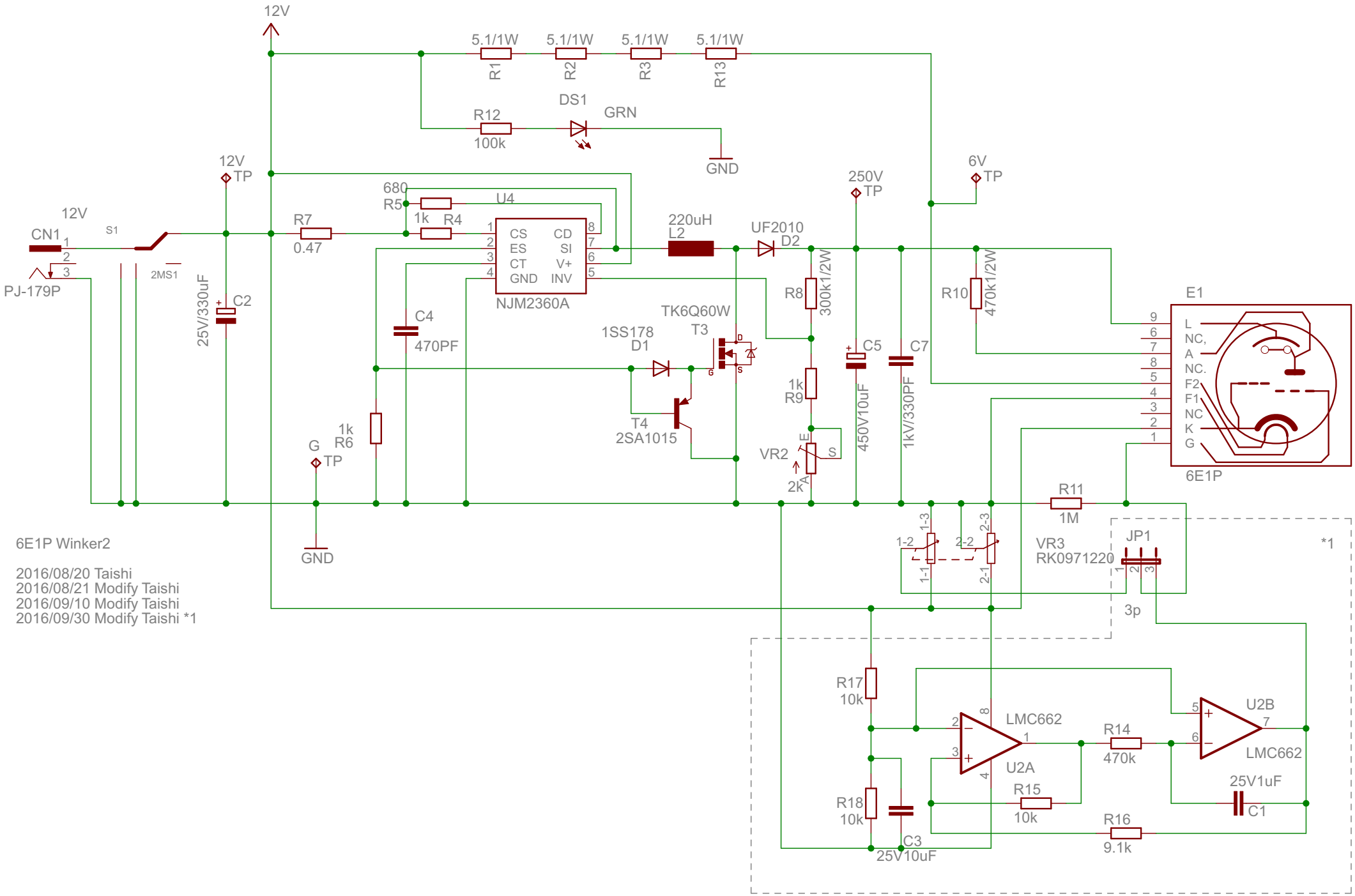
12V
5.1/1W
R1
R2
R3
R13
DS1
GRN
R12
100k
GND
12V
TP
680
R5
U4
1k
R4
R7
0.47
CN1
S1
2MS1
PJ-179P
25V/330uF
C2
CS
ES
CT
GND
CD
SI
V+
INV
NJM2360A
C4
470PF
220uH
L2
UF2010
D2
250V
TP
6V
TP
R8
300k1/2W
R10
470k1/2W
TK6Q60W
T3
1SS178
D1
T4
2SA1015
1k
R9
VR2
2k
C5
450V10uF
C7
1kV/330PF
E1
L
NC,
A
NC.
F2
F1
NC
K
G
6E1P
1k
R6
G
TP
GND
R11
1M
VR3
RK0971220
JP1
3p
*1
6E1P Winker2
2016/08/20 Taishi
2016/08/21 Modify Taishi
2016/09/10 Modify Taishi
2016/09/30 Modify Taishi *1
R17
10k
R18
10k
C3
25V10uF
LMC662
U2A
R14
470k
R15
10k
R16
9.1k
U2B
LMC662
25V1uF
C1