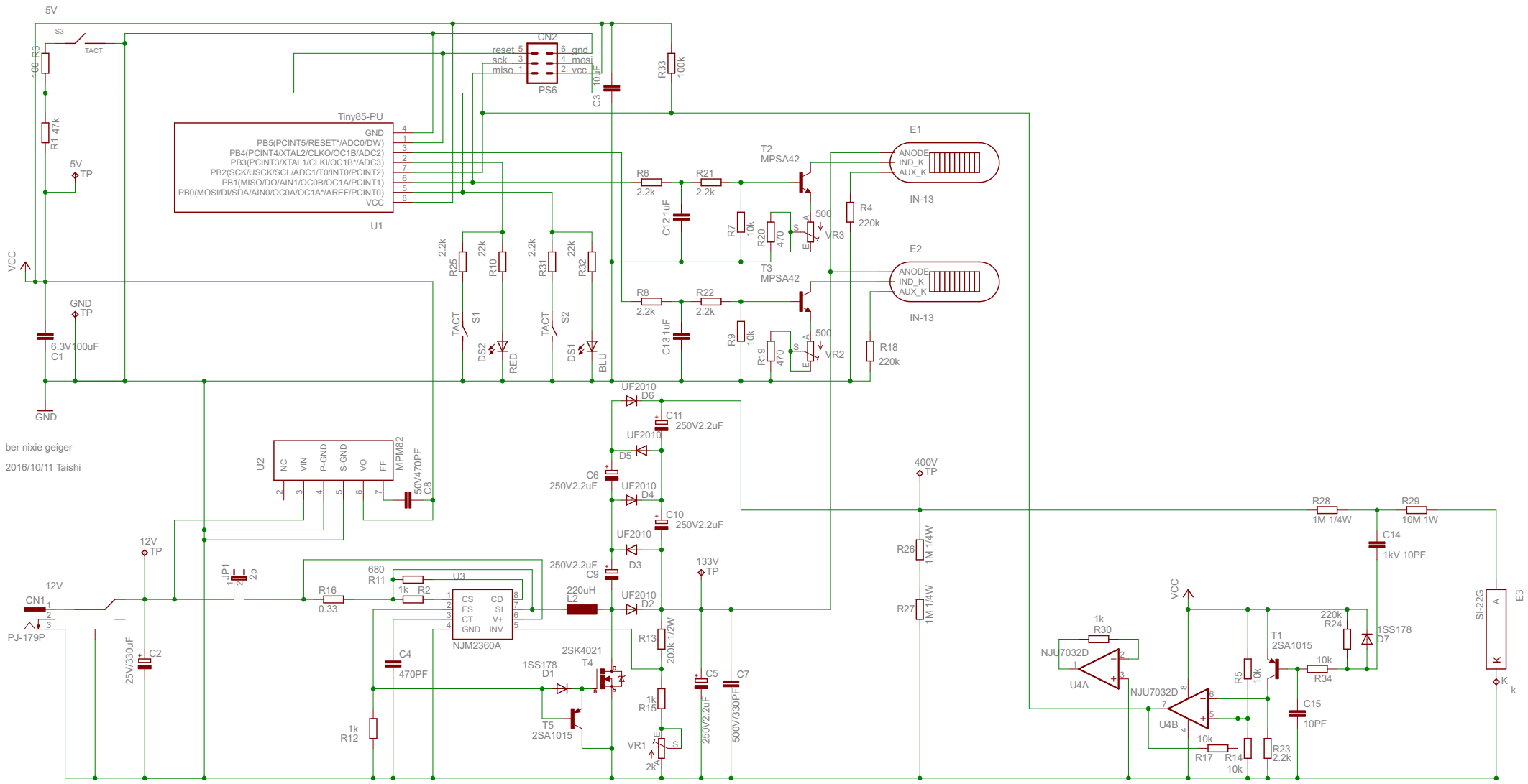
5V
S3
TACT
100 R3
R1 47k
5V
TP
VCC
GND
TP
6.3V100uF
C1
GND
CN2
reset
sck
miso
gnd
mosi
vcc
PS6
C3 10uF
R33 100k
Tiny85-PU
GND
PB5(PCINT5/RESET*/ADC0/DW)
PB4(PCINT4/XTAL2/CLKO/OC1B/ADC2)
PB3(PCINT3/XTAL1/CLKI/OC1B*/ADC3)
PB2(SCK/USCK/SCL/ADC1/T0/INT0/PCINT2)
PB1(MISO/DO/AIN1/OC0B/OC1A/PCINT1)
PB0(MOSI/DI/SDA/AIN0/OC0A/OC1A*/AREF/PCINT0)
VCC
U1
R6 2.2k
R21 2.2k
C12 1uF
R7 10k
R20 470
T2
MPSA42
VR3 500
R4 220k
E1
ANODE
IND_K
AUX_K
IN-13
R8 2.2k
R22 2.2k
C13 1uF
R9 10k
R19 470
T3
MPSA42
VR2 500
R18 220k
E2
ANODE
IND_K
AUX_K
IN-13
R25 2.2k
R10 22k
R31 2.2k
R32 22k
TACT
S1
DS2
RED
TACT
S2
DS1
BLU
ber nixie geiger
2016/10/11 Taishi
U2
NC
VIN
P-GND
S-GND
VO
FF
MPM82
50V470PF
C8
UF2010
D6
C11
250V2.2uF
UF2010
D5
C6
250V2.2uF
UF2010
D4
C10
250V2.2uF
UF2010
D3
250V2.2uF
C9
UF2010
D2
220uH
L2
R13
200k 1/2W
R15
1k
VR1
2k
C5
250V2.2uF
C7
500V/330PF
133V
TP
400V
TP
R26
1M 1/4W
R27
1M 1/4W
12V
TP
12V
CN1
PJ-179P
JP1
2p
R16
0.33
680
R11
1k
R2
U3
CS
ES
CT
GND
CD
SI
V+
INV
NJM2360A
C4
470PF
1SS178
D1
2SK4021
T4
T5
2SA1015
1k
R12
25V/330uF
C2
R28
1M 1/4W
R29
10M 1W
C14
1kV 10PF
VCC
1k
R30
NJU7032D
U4A
NJU7032D
U4B
R5 10k
T1
2SA1015
220k
R24
1SS178
D7
10k
R34
C15
10PF
10k
R17
R14
10k
R23
2.2k
SI-22G
A
K
E3
k