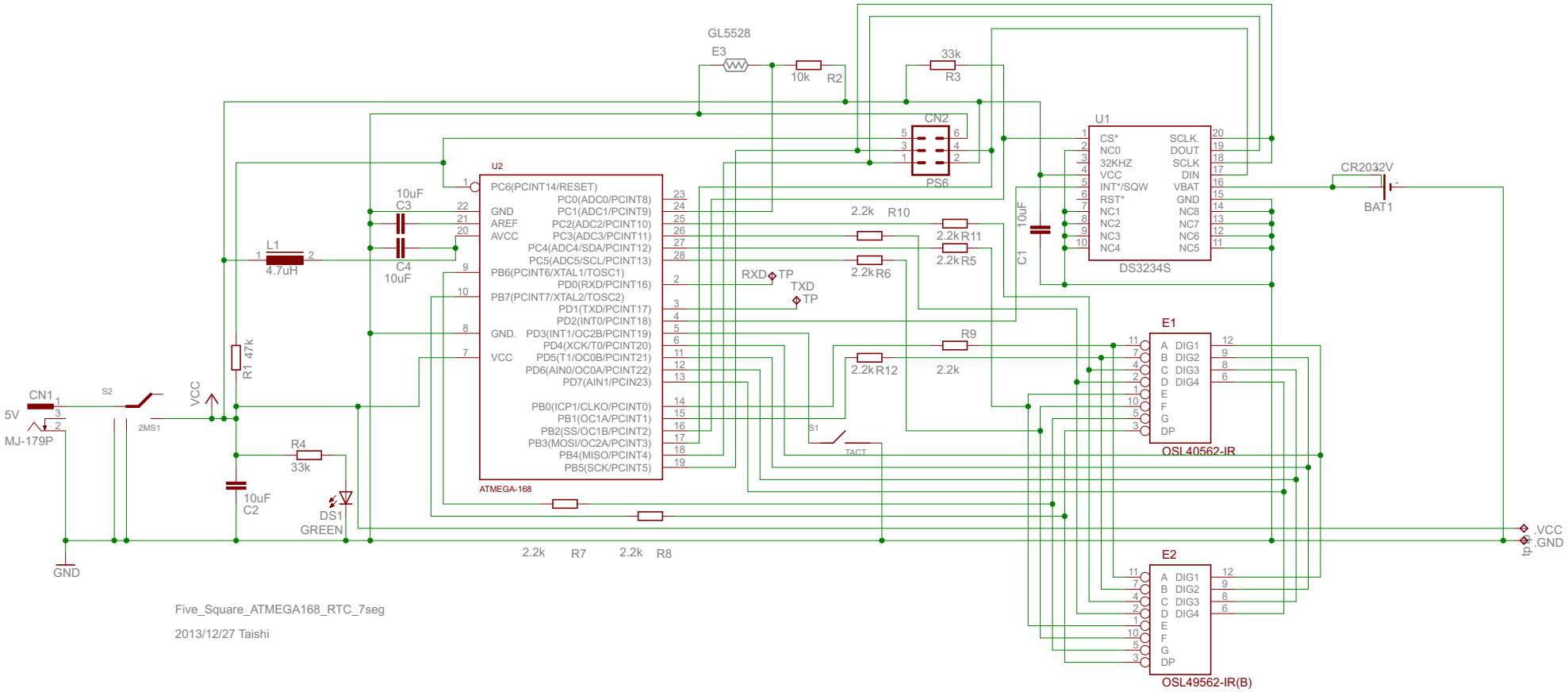

Five_Square_ATMEGA168_RTC_7seg

2013/12/27 Taishi