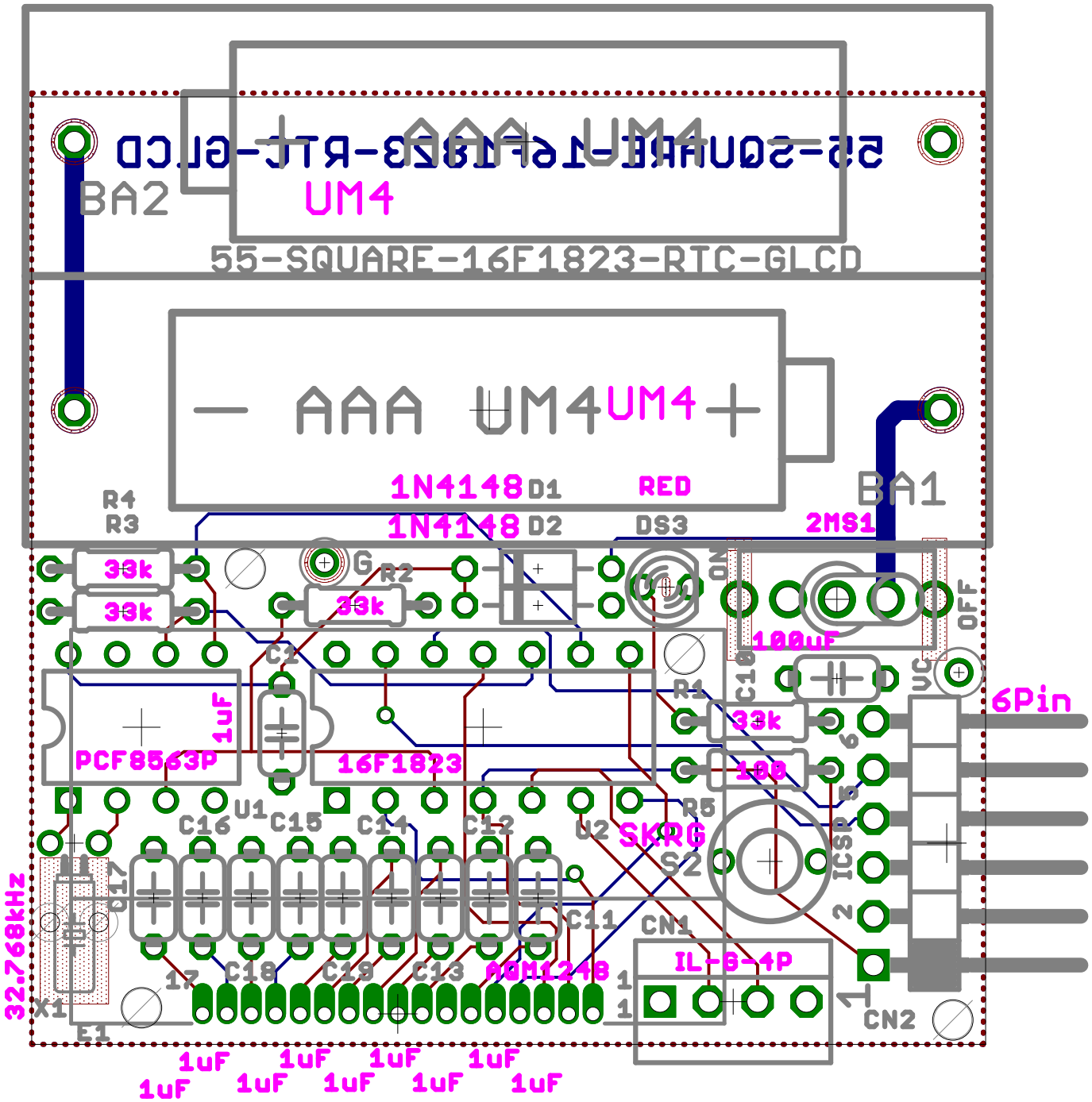
55-SQUARE-16F1823-RTC-GLCD
UM4
BA2
AAA
UM4
UM4
BA1
1N4148 D1
1N4148 D2
RED
DS3
2MS1
R4
R3
33k
33k
G
R2
33k
ON
OFF
C10
100uF
VC
6Pin
C2
1uF
PCF8563P
16F1823
R1
33k
100
R5
SKRG
S2
ICSP
U1
U2
C16
C15
C14
C12
C11
D17
32.768kHz
X1
E1
C18
C19
C13
AOM1248
CN1
IL-G-4P
CN2
1uF
1uF
1uF
1uF
1uF
1uF
1uF
1uF
1uF
1uF