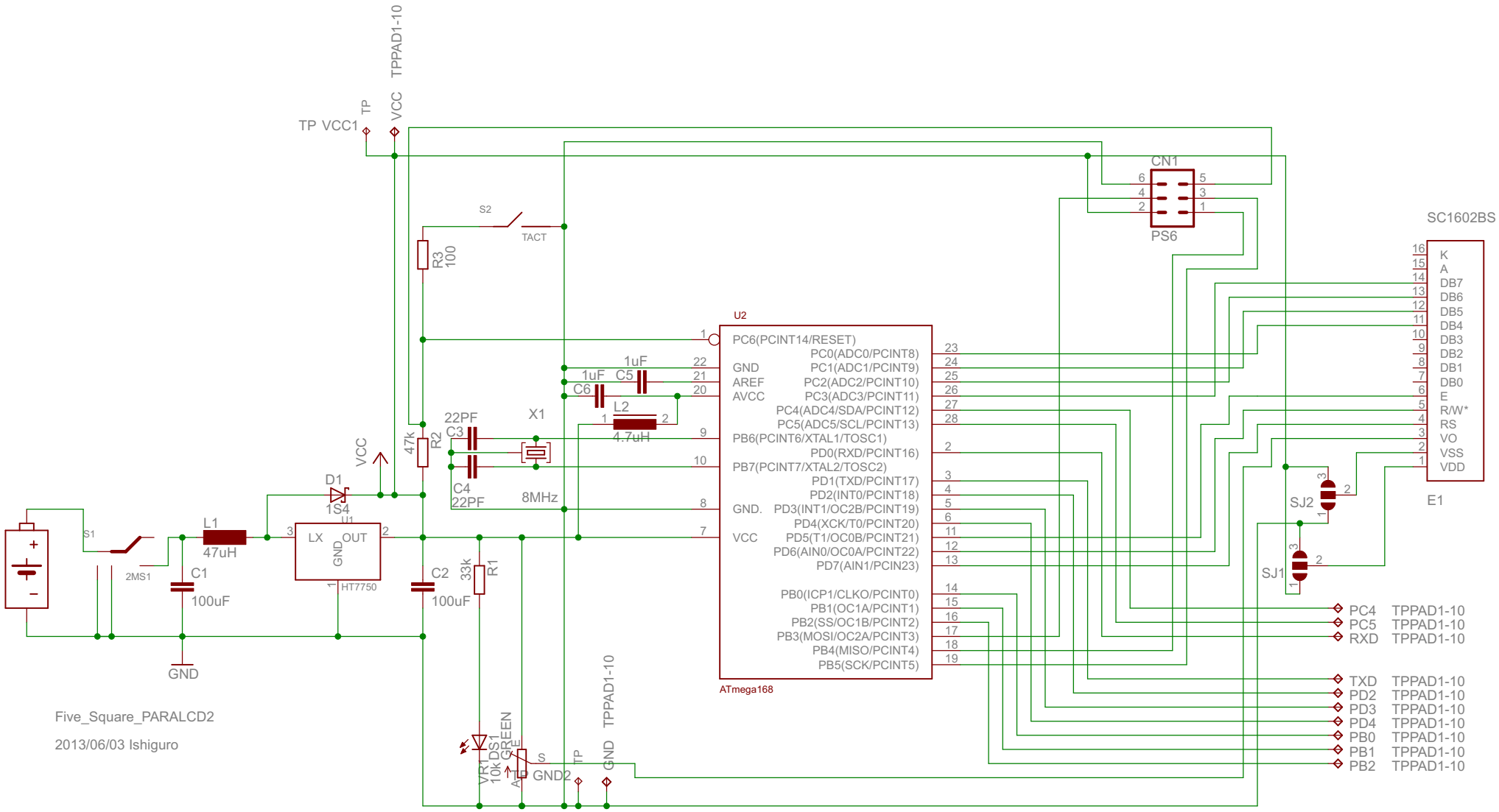
TPPAD1-10
TP
VCC
TP VCC1
S2
TACT
R3
100
CN1
PS6
SC1602BS
K
A
DB7
DB6
DB5
DB4
DB3
DB2
DB1
DB0
E
R/W*
RS
VO
VSS
VDD
E1
U2
PC6(PCINT14/RESET)
PC0(ADC0/PCINT8)
GND
PC1(ADC1/PCINT9)
AREF
PC2(ADC2/PCINT10)
AVCC
PC3(ADC3/PCINT11)
PC4(ADC4/SDA/PCINT12)
PC5(ADC5/SCL/PCINT13)
PB6(PCINT6/XTAL1/TOSC1)
PD0(RXD/PCINT16)
PB7(PCINT7/XTAL2/TOSC2)
PD1(TXD/PCINT17)
PD2(INT0/PCINT18)
GND.
PD3(INT1/OC2B/PCINT19)
PD4(XCK/T0/PCINT20)
VCC
PD5(T1/OC0B/PCINT21)
PD6(AIN0/OC0A/PCINT22)
PD7(AIN1/PCIN23)
PB0(ICP1/CLKO/PCINT0)
PB1(OC1A/PCINT1)
PB2(SS/OC1B/PCINT2)
PB3(MOSI/OC2A/PCINT3)
PB4(MISO/PCINT4)
PB5(SCK/PCINT5)
ATmega168
1uF
C5
1uF
C6
L2
4.7uH
22PF
C3
X1
C4
22PF
8MHz
VCC
47k
R2
D1
1S4
U1
LX
OUT
GND
HT7750
L1
47uH
S1
2MS1
C1
100uF
C2
100uF
33k
R1
GND
VR1
10k
DS1
GREEN
S
GND2
TP
GND
TPPAD1-10
SJ2
SJ1
PC4 TPPAD1-10
PC5 TPPAD1-10
RXD TPPAD1-10
TXD TPPAD1-10
PD2 TPPAD1-10
PD3 TPPAD1-10
PD4 TPPAD1-10
PB0 TPPAD1-10
PB1 TPPAD1-10
PB2 TPPAD1-10
Five_Square_PARALCD2
2013/06/03 Ishiguro