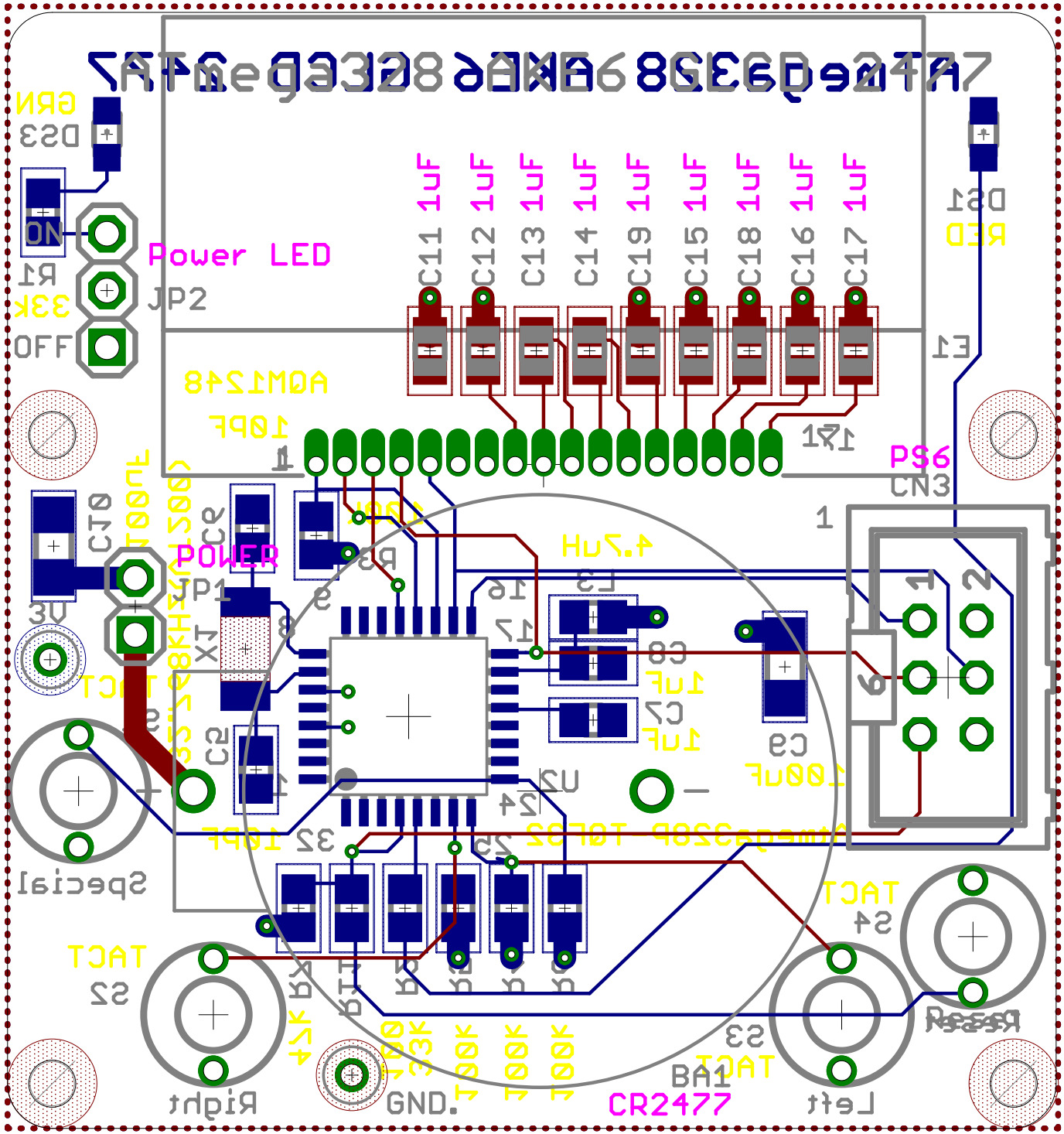
Power LED
JP2
ON
OFF
C11 1uF
C12 1uF
C13 1uF
C14 1uF
C19 1uF
C15 1uF
C18 1uF
C16 1uF
C17 1uF
PS6
CN3
POWER
JP1
Special
TACT
S2
TACT
S4
TACT
S3
Right
GND.
Left
BA1
CR2477