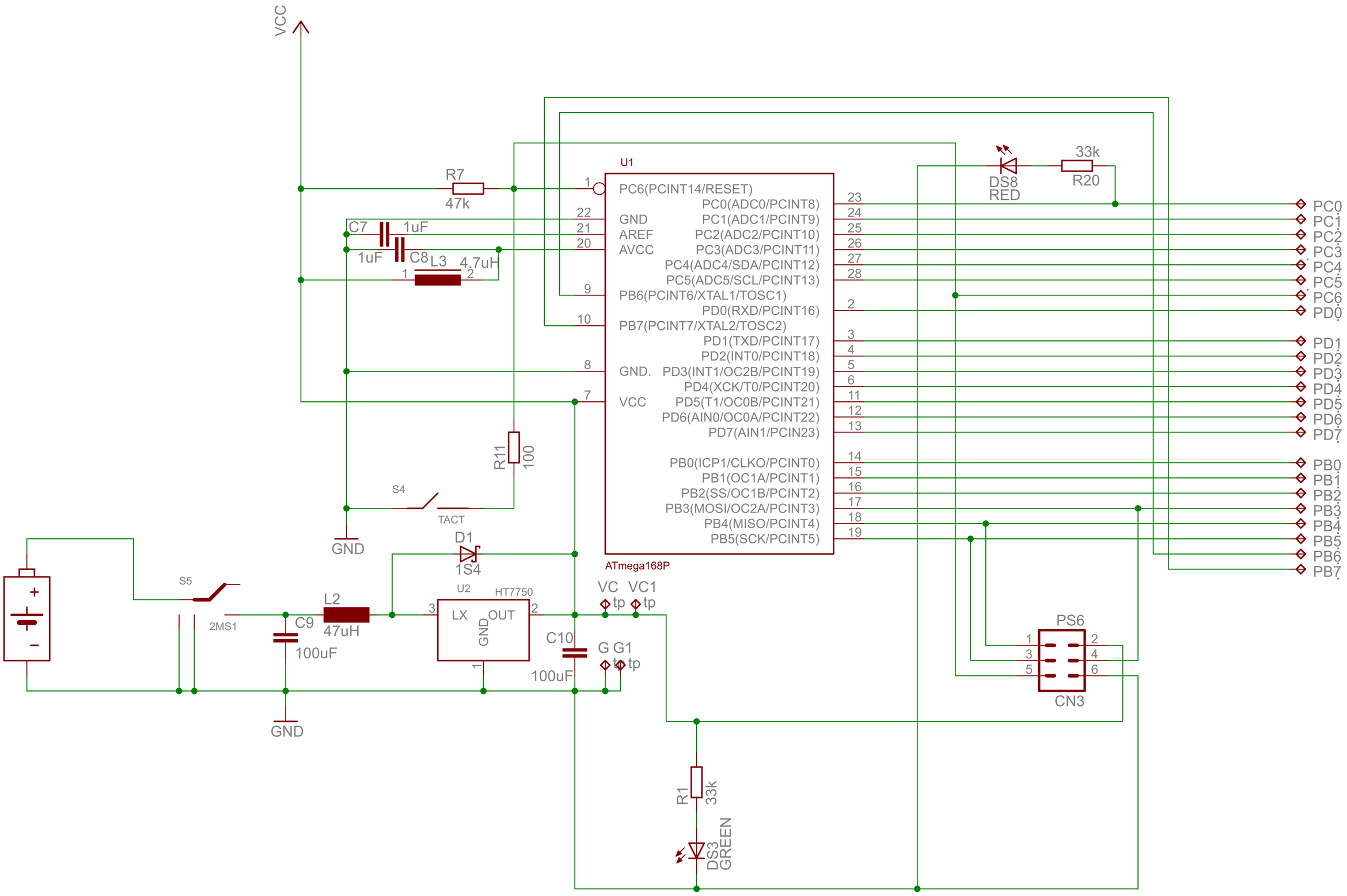


5x8 168 Utl-2

* Invalid tStop & bStop Remove(2013/06/05)

2013/05/14 Taishi