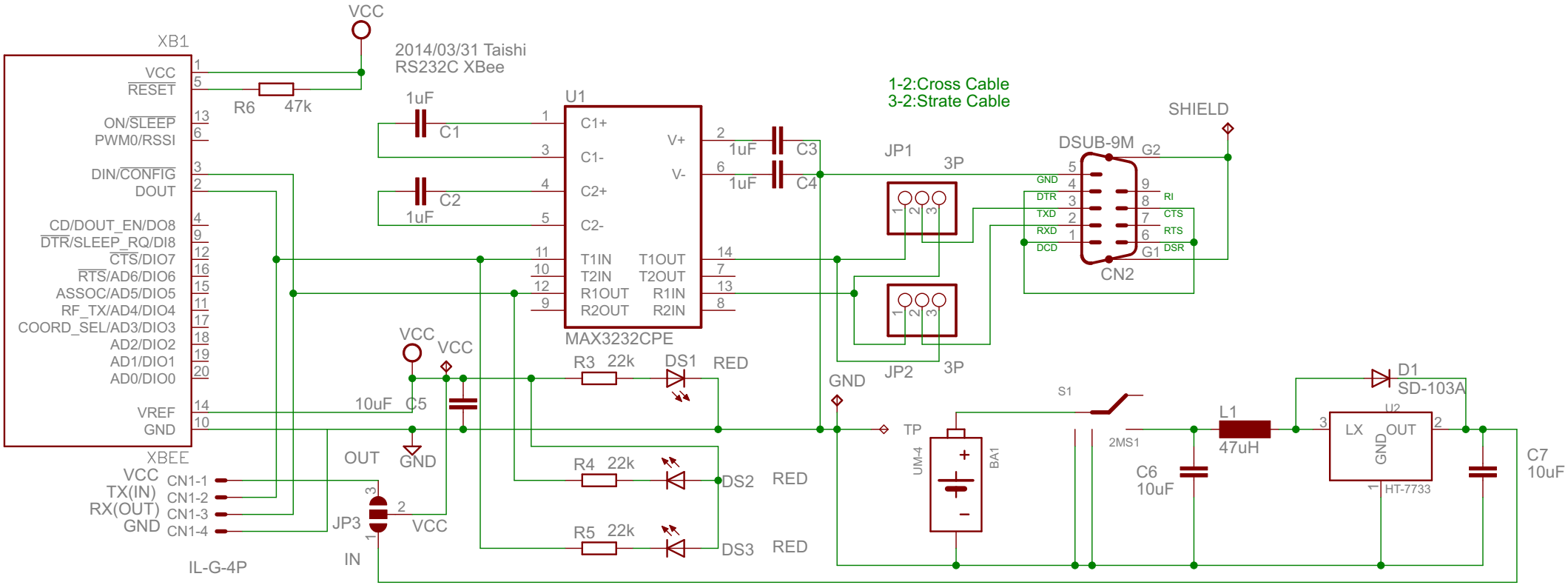
2014/03/31 Taishi
RS232C XBee
1-2:Cross Cable
3-2:Strate Cable
XB1
VCC
RESET
ON/SLEEP
PWM0/RSSI
DIN/CONFIG
DOUT
CD/DOUT_EN/DO8
DTR/SLEEP_RQ/DI8
CTS/DIO7
RTS/AD6/DIO6
ASSOC/AD5/DIO5
RF_TX/AD4/DIO4
COORD_SEL/AD3/DIO3
AD2/DIO2
AD1/DIO1
AD0/DIO0
VREF
GND
XBEE
R6 47k
1uF C1
1uF C2
U1
C1+
C1-
C2+
C2-
V+
V-
T1IN
T2IN
R1OUT
R2OUT
T1OUT
T2OUT
R1IN
R2IN
MAX3232CPE
1uF C3
1uF C4
JP1 3P
JP2 3P
DSUB-9M
CN2
GND
DTR
TXD
RXD
DCD
RI
CTS
RTS
DSR
G1
G2
SHIELD
VCC
10uF C5
R3 22k DS1 RED
R4 22k DS2 RED
R5 22k DS3 RED
GND
TP
UM-4
BA1
S1
2MS1
L1
47uH
C6
10uF
D1
SD-103A
U2
LX
OUT
GND
HT-7733
C7
10uF
VCC
TX(IN)
RX(OUT)
GND
CN1-1
CN1-2
CN1-3
CN1-4
IL-G-4P
OUT
GND
JP3
IN
VCC