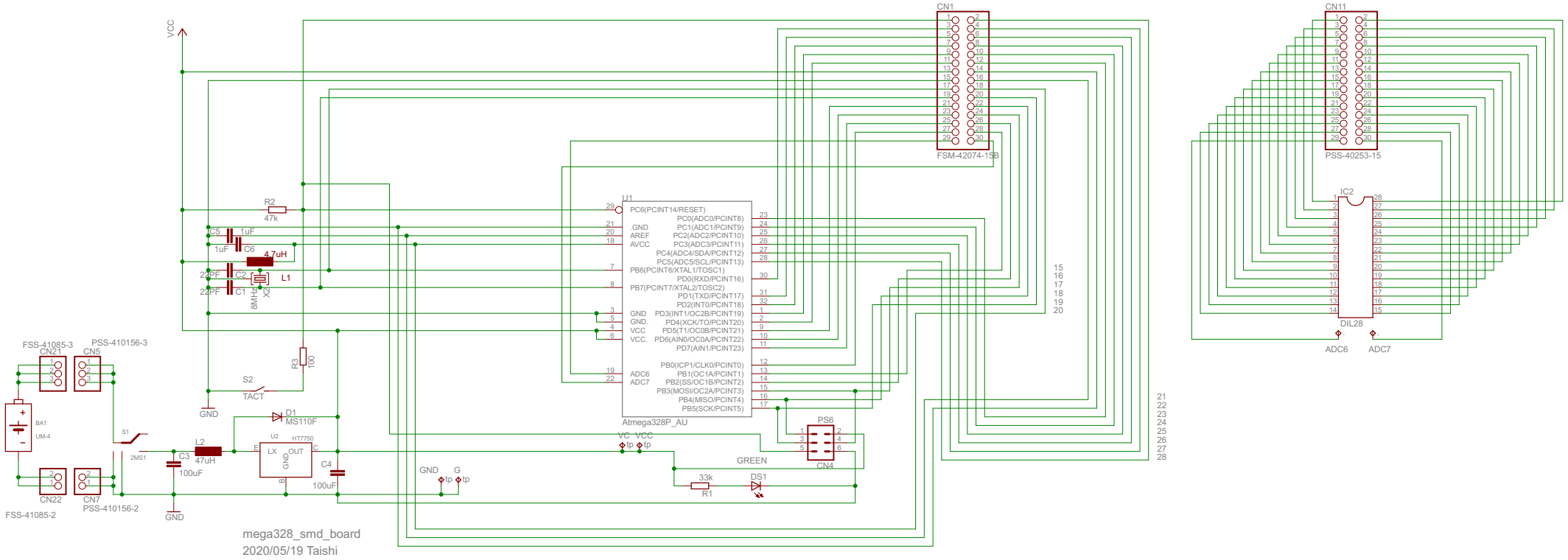
VCC
CN1
FSM-42074-15B
CN11
PSS-40253-15
IC2
DIL28
ADC6
ADC7
U1
PC6(PCINT14/RESET)
PC0(ADC0/PCINT8)
.GND
PC1(ADC1/PCINT9)
AREF
PC2(ADC2/PCINT10)
AVCC
PC3(ADC3/PCINT11)
PC4(ADC4/SDA/PCINT12)
PC5(ADC5/SCL/PCINT13)
PB6(PCINT6/XTAL1/TOSC1)
PD0(RXD/PCINT16)
PB7(PCINT7/XTAL2/TOSC2)
PD1(TXD/PCINT17)
PD2(INT0/PCINT18)
GND
PD3(INT1/OC2B/PCINT19)
GND.
PD4(XCK/T0/PCINT20)
VCC
PD5(T1/OC0B/PCINT21)
VCC.
PD6(AIN0/OC0A/PCINT22)
PD7(AIN1/PCINT23)
PB0(ICP1/CLK0/PCINT0)
ADC6
PB1(OC1A/PCINT1)
ADC7
PB2(SS/OC1B/PCINT2)
PB3(MOSI/OC2A/PCINT3)
PB4(MISO/PCINT4)
PB5(SCK/PCINT5)
Atmega328P_AU
R2
47K
C5
1uF
C6
1uF
4.7uH
L1
C2
22PF
C1
22PF
8MHz
X2
R3
100
S2
TACT
GND
D1
MS110F
U2
HT7750
LX
OUT
GND
L2
47uH
C3
100uF
C4
100uF
FSS-41085-3
CN21
PSS-410156-3
CN5
BA1
UM-4
S1
2MS1
CN22
FSS-41085-2
CN7
PSS-410156-2
GND
VC
VCC
tp
GND
G
PS6
CN4
GREEN
33k
R1
DS1
mega328_smd_board
2020/05/19 Taishi